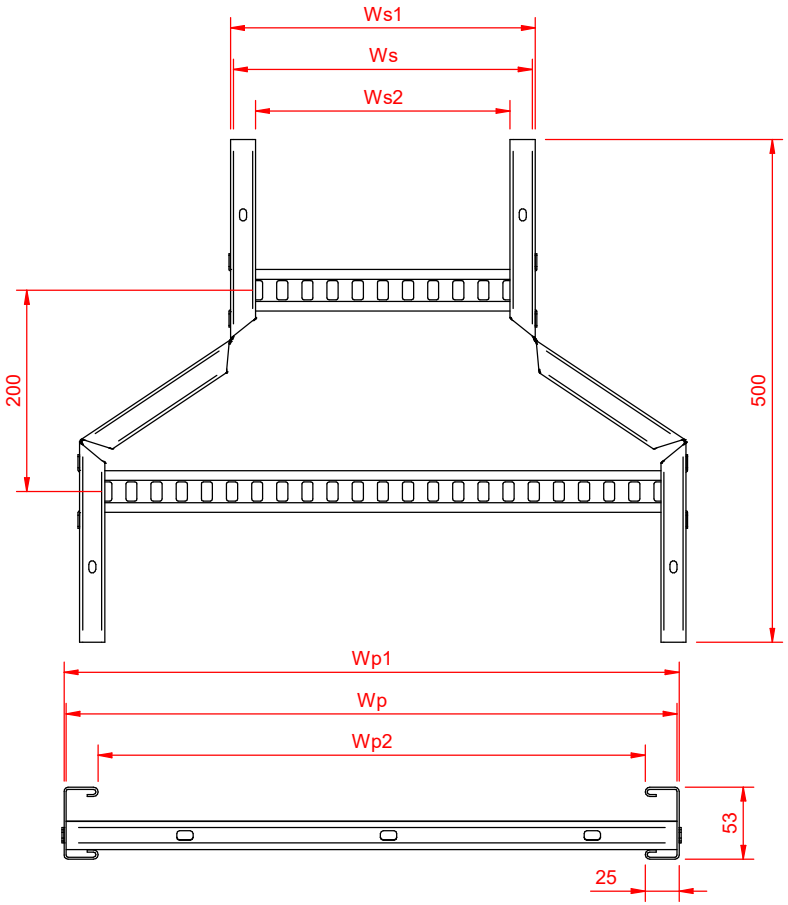

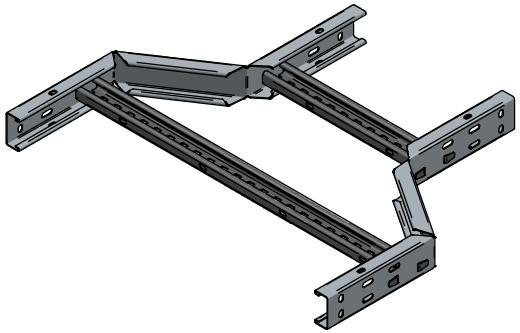

Vantrunk Part Number	Dimensions						Weight	Sidewall	Rung
	Wp	Wp1	Wp2	Ws	Ws1	Ws2	(Kg)	Gauge	Gauge
SW2-RS-200-150-$$-1.5W-1.5T	200	203	153	150	153	103	1.67	1.5	1.5
SW2-RS-300-150-$$-1.5W-1.5T	300	303	253				1.86		
SW2-RS-450-150-$$-1.5W-1.5T	450	453	403				2.19		
SW2-RS-500-150-$$-1.5W-1.5T	500	503	453				2.31		
SW2-RS-600-150-$$-1.5W-1.5T	600	603	553				2.54		
SW2-RS-300-200-$$-1.5W-1.5T	300	303	253	200	203	153	1.85		
SW2-RS-450-200-$$-1.5W-1.5T	450	453	403				2.18		
SW2-RS-500-200-$$-1.5W-1.5T	500	503	453				2.29		
SW2-RS-600-200-$$-1.5W-1.5T	600	603	553				2.52		
SW2-RS-450-300-$$-1.5W-1.5T	450	453	403	300	303	253	2.16		
SW2-RS-500-300-$$-1.5W-1.5T	500	503	453				2.26		
SW2-RS-600-300-$$-1.5W-1.5T	600	603	553				2.49		
SW2-RS-500-450-$$-1.5W-1.5T	500	503	453	450	453	403	2.27		
SW2-RS-600-450-$$-1.5W-1.5T	600	603	553				2.46		
SW2-RS-600-500-$$-1.5W-1.5T	600	603	553	500	503	453	2.64		

UNCONTROLLED COPY WHEN RELEASED

NOTES: IF IN DOUBT ASK

1. ALL DIMENSIONS IN MILLIMETRES
2. PART NUMBER REFERENCE:
   SW2-RS-Wp-Ws-$$-1.5W-1.5T

   'W' DENOTES - ADD WIDTH IN mm
   '$$' DENOTES - ADD MATERIAL
   & FINISH SPECIFICATION REFERENCE
3. MATERIAL & FINISH SPECIFICATION:
   QQ - PRE GLAVANIZED
   STRUCTURAL STEEL
   ZM - ZINC MAGNESIUM
   (BS EN 10346:2015)

REV	DETAILS	DRN	CHK	APR	DATE
01	INFORMATION RELEASE	LR	CG	DO	25/06/26

VANTRUNK LIMITED
SWINEYARD LANE,
APPLETON, WARRINGTON,
CHESHIRE, ENGLAND,
WA16 0SD

TEL: +44 (0) 1928 564211
FAX: +44 (0) 1928 580157

VANTRUNK
EXTREME CABLE MANAGEMENT
www.vantrunk.com

THIS DRAWING IS THE COPYRIGHT OF VANTRUNK LTD AND IS NOT TO BE REPRODUCED OR PASSED TO THIRD PARTIES WITHOUT WRITTEN CONSENT

SCALE: NTS
TOLERANCES (UOS): ±1.0mm ±1.0 °
3rd ANGLE:

VANTRUNK SPEEDWAY®

DRAWING TITLE:
Speedway 2 - Straight Reducer

DRAWING NUMBER:

TYPE:	PART NUMBER:	REVISION:
DIM_	SW2-RS-Wp-Ws-$$-1.5W-1.5T	_01